ALVA'S INSTITUTE OF ENGINEERING & TECHNOLOGY
(A Unit of Alva's Education Foundation)
Shobhavana Campus, Mijar-574225, Moodbidri, D.K
Phone: 08258-262725, Fax: 08258-262726
Affiliated to VTU Belagavi and Approved by AICTE, New Delhi, Recognized by Govt. of Karnataka

ATTENDANCE BOOK

Academic Year : 2019 - 2020

Semester : 3rd Section A

Period of the Semester : From 29-07-19 to 30-11-2019

Subject with Code : Metal Cutting & Forming [18ME35A]

Name of the Faculty : Ganesh. M.R.

Department : Mechanical.

VISION OF THE INSTITUTE

"Transformative education by pursuing excellence in Engineering and Management through enhancing skills to meet the evolving needs of the community"

MISSION OF THE INSTITUTE

- To bestow quality technical education to imbibe knowledge, creativity and ethos to students community.
- To inculcate the best engineering practices through transformative education.
- To develop a knowledgeable individual for a dynamic industrial scenario.
- To inculcate research, entrepreneurial skills and human values in order to cater the needs of the society.

VISION OF THE DEPARTMENT

Impart Quality Technical education to excel in Mechanical Engineering to meet the needs of the Community.

MISSION OF THE DEPARTMENT

1. Empower Student knowledge in basic and applied areas of Mechanical engineering.
2. Strengthening Collaboration with industries, Research Organisations and Institutes for internship, Joint Research and Consultancy.
3. To inculcate entrepreneurial skills and human values to adhere to cater the needs of Society.
4. Exposure to industrial practices for managerial skills and professionalism

COURSE OUTCOMES

CO1	Explain the Construction & Specification of various machine tools, different tool materials, tool nomenclature & surface finish.
CO2	Explain the Concept of different machining operations like milling, Drilling, Shaping, planing, Slotting, Grinding & its operating parameters
CO3	Apply mechanics of machining processes to evaluate machining time by having the knowledge of tool wear mechanisms & equations to enhance the tool life & minimize the
CO4	Explain the Concept of different types of finishing processes & its defects.
CO5	Explain the Concepts of Sheet metal & Bending operations & apply the concepts of design of sheet metal dies to design diff dies for simple sheet metal operations
CO6	

	PO1	PO2	PO3	PO4	PO5	PO6	PO7	PO8	PO9	PO10	PO11	PO12	PSO1	PSO2	PSO3	PSO
CO1	2	1			2			1	1	1		1	2	1		
CO2	2	2			1			1	1	1		1	1	1		
CO3	2	2			1			1	1	1		1	1	1		
CO4	2	2			1			1	1	1		1	2	2		
CO5	2	2			1			1	1	1		1	2	1		
CO6																

DEPARTMENT OF MECHANICAL ENGINEERING
ACADEMIC CALENDAR (2019-20)-ODD

Sl.No	Departmental Activities	Dates
1.	Certification course on "Ansys"	3rd & 4th July,2019
2.	Pre-placement Training to Final Years	10-07-2019 to 25-08-2019
3.	Certification Course "CATIA"	August 1st Week
4.	Commencement of Classes I,III,V, VII Semester	29-07-2019
5.	Submission of Project Synopsis Final Year	01-08-2019
6.	Soft Skill Training for V Sem ME	08-08-2019
7.	Project Synopsis Presentation	25-08-2019
8.	Technical Talk -1	2nd Week of August
9.	Last date to Submit Initial Assignments	31st August,2019
10.	Technical Talk -2	1st Week of September
11.	Soft Skill Training for III Sem ME	10-09-2019
12.	Technical Talk -3	3rd Week of September
13.	IA-Test I	19th, 20th, 21st September
14.	Technical Talk -4	Last week of September
15.	Last date to Submit Intermediate Assignments	30th September,2019
16.	Technical Talk -5	First Week of October
17.	Project Phase –I Evaluation	2nd week of October,2019
18.	NSS forum Activity	Last Week of October
19.	IA-Test II	24th, 25th & 26th Oct,2019
20.	Technical Talk -6	Last Week of October
21.	Industrial Visit	Last Week of October
22.	Last date to Submit the Final Assignments	31st October,2019

23.	IA-Test III	26th to 28th Nov,2019
24.	Last Working Day	30-11-2019
25.	Certfication course on "Hands on Fabrication work"	January,2020
26.	Workshop on "Computer Numerical Control"	January,2020

HOD

H. O. D.

Dept. Of Mechanical Engineering
Alva's Institute of Engg. & Technolog
Mijar, MOODBIDRI - 574 225

DEPARTMENT OF MECHANICAL ENGINEERING
ACADEMIC CALENDAR (2019-20)-EVEN

Sl.No	Departmental Activities	Dates
1.	Certification course	15th Jan, 2020
2.	Workshop "Application of Mechanical Engineering"	3rd week of Jan,2020
3.	Creating Awareness about present scenario in the market webinar	1st week February, 2020
4.	Final Year Project Evaluation – Phase-II	2nd week Feb,2020
5.	AMCAT Assessment test	27th Feb,2020
6.	Technical Talk 8	Last week of Feb,2020
7.	Mechanical Event – Varista Keridakota	Feb last Week
8.	Technical Talk 9	1st week March,2020
9.	I.A Test -1	19th – 21st March,2020
10.	Final Year Project Evaluation – Phase-III	28th & 29th March,2020
11.	Technical Talk 10	4th week of March,2020
12.	Submission of Journal and Review Paper	31st March,2020
13.	Final Project Evaluation	7th April,2020
14.	Technical Talk 11	2nd week of April,2020
15.	Last date for Draft copy of Project Report Submission	25th April,2020
16.	Technical Talk 12	Last week of April,2020
17.	Final Year BE Project Exhibition	24th April,2020
18.	I.A Test 2	27th-29th April,2020
19.	Last date to Submit Initial Assignments	30 April 2020
20.	Last date to Submit Intermediate Assignments	12th May 2020
21.	I.A Test 3	26th – 28th, May 2020
22	Last working day	29th May 2021
23	Submission of Final Avg Marks	1st week of June 2021

HOD

H.O.D.
Dept. Of Mechanical Engineering
Alva's Institute of Engg. & Technolo
Mijar, MOODBIDRI - 574 225

MIJAR

ATTENDANCE CUM INTERNAL

OODBIDRI - 574 225

Class

Subject: Metal Cutting & Forming.

No. of Classes held

Sl No	USN	Name	1	2	3	4	5	6	7	8	9	10	11	12	13	14	15	16	17	18	19	20	21	22	23	24	25	26	27	28	29	30	No. of Class Attended	% of Attendance	Internal Assessment (25) I	II	III	Average Marks
1	4AL 17ME015	Bharath. B.D	1	2	3	A	4	5	6	7	A	8	9	10	11	A	13	14	15	16	17	18	A	A	19	20	A	21	22	23	24		48	87	04	16	20	24
2	17ME029	Mahantesh	1	2	3	4	5	6	7	8	9	10	11	12	13	14	15	16	17	18	19	20	21	22	23	24	25	26	27	28	29	30	52	94	13	16	21	27
3	17ME065	Shreyas Tiwari	Detained																														—	—	—	—	—	—
3	18ME001	Amith Kumar. B	1	A	2	3	A	4	5	6	7	8	9	10	11	12	13	14	15	16	17	A	18	19	A	A	20	A	21	22	23	24	49	89	05	14	26	25
4	18ME002	Annapurna V patil	1	2	3	4	5	6	7	8	9	10	11	12	13	14	15	16	17	18	A	19	20	21	22	A	23	A	24	25	26	27	52	94	23	26	29	36
5	18ME003	Arun Kumar. P.G	1	2	3	4	5	6	7	8	9	10	11	12	13	14	15	16	17	18	19	20	21	A	22	23	24	25	26	27	29	30	53	96	17	27	29	35
6	18ME004	Basavaraj R. Goji	1	2	3	4	5	6	7	8	9	A	10	11	12	13	14	15	16	17	18	19	20	21	22	A	A	23	24	25	26	27	50	91	21	19	25	32
7	18ME005	Bharath. B.T	1	2	3	4	5	6	7	8	9	10	11	12	13	14	15	16	17	18	19	20	21	22	23	A	24	25	26	27	28	29	52	94	06	AB	25	21
8	~~18ME020~~	~~Bhushan R Kundar~~	Detained																														—	—	—	—	—	—
08	18ME006	Bipin Waikhom	A	A	A	A	A	1	2	3	4	5	A	6	7	8	9	10	11	12	13	14	15	16	17	18	19	20	21	22	23	24	54	98	13	26	29	33
09	18ME007	Charan D.B	1	2	3	4	5	6	7	8	A	9	10	11	12	13	14	15	16	17	18	19	A	A	20	21	22	23	24	25	26	27	52	94	11	15	23	27
10	18ME008	Charan Raj. R	A	A	A	A	1	2	3	4	5	6	7	8	9	10	11	12	13	14	15	A	16	17	18	19	20	21	22	23	24	25	54	98	08	23	21	28
11	18ME010	Dheeraj H. Tandel	1	2	3	4	5	6	7	8	9	10	11	12	13	14	15	16	17	18	19	20	21	22	23	A	24	25	26	A	27	28	51	92	08	08	19	22
12	18ME011	Elish Ganesh	A	1	A	2	2	4	5	A	6	7	8	9	10	11	12	13	14	15	16	A	17	18	19	20	21	22	23	24	25	26	51	92	26	28	29	38
13	18ME012	Gaurav Chandrashekar Sanil	1	2	3	4	5	6	7	8	9	10	11	12	13	14	15	16	17	18	19	20	21	22	23	24	25	26	A	27	28	29	51	92	06	08	28	24
14	18ME013	Gautham. S.N	1	2	3	4	5	6	7	A	8	9	10	A	11	12	13	14	15	16	17	18	19	20	A	A	A	21	22	23	24	25	54	98	11	21	20	26
15	18ME014	Harshith. T.K.	1	2	3	4	5	6	7	8	9	10	11	12	13	14	15	16	17	18	19	20	21	22	23	24	25	26	27	28	29	30	53	96	15	16	23	28
16	18ME015	Janardhan. J.	1	2	3	4	5	6	7	8	9	10	11	12	13	14	15	16	17	18	19	20	21	22	23	24	25	26	27	28	29	30	53	96	19	20	25	32
17	18ME016	Jayanth. L.U	1	2	3	4	5	6	7	8	9	10	11	12	13	14	15	16	17	18	19	20	21	22	23	24	25	26	27	28	29	30	52	94	11	16	15	24
18	18ME017	Karanam Lalith Yashwanth	A	A	1	2	A	3	4	5	6	A	7	8	9	10	11	12	13	14	15	16	17	18	19	A	20	21	A	22	23	24	49	89	12	13	28	27
19	18ME018	Karthik	1	2	3	4	A	A	5	6	7	8	9	10	11	12	13	14	15	16	17	18	19	20	21	22	23	24	A	25	26	27	—	—	08	AB	AB	—
20	18ME019	Keerthan Subhashchandra Kuckian	1	2	3	4	5	6	7	8	9	10	11	12	13	14	15	16	17	18	A	19	20	21	22	23	24	25	A	26	27	28	50	91	16	24	26	31
23	18ME020	Bhushan R Kundar	Detained																														—	—	—	—	—	—
24	18ME021	M Pratheek Shet	Detained																														—	—	—	—	—	—
25	18ME022	Megharaj A Kencharaddi	1	2	3	A	4	5	6	7	8	9	10	11	12	13	14	15	16	17	18	19	20	21	22	23	24	A	A	25	26	27	51	92	15	18	12	25
26	18ME023	Muzammil Chitragar	1	2	3	4	5	6	7	8	A	A	A	A	A	A	A	A	A	A	9	10	11	12	13	14	15	16	17	18	19	20	54	98	23	22	19	32
27	18ME024	Nabisharif	1	2	3	4	5	A	6	7	A	8	A	A	9	10	11	12	13	A	14	15	16	17	18	A	19	20	21	22	23	24	46	83	17	18	26	29
28	18ME026	Preetham. S	1	2	3	4	5	6	7	8	A	A	9	10	11	12	13	14	15	16	17	18	19	20	A	A	A	21	22	23	24	25	51	92	15	22	27	32
29	18ME027	Puneeth Kumar. D.N	1	2	3	4	5	6	7	8	9	10	11	12	13	14	15	16	17	18	19	20	21	22	23	24	25	26	A	27	28	29	53	96	18	13	19	27
30	18ME028	Ranson Ashray Carvallo	1	2	3	4	5	6	7	8	9	10	A	11	12	13	14	15	16	17	18	19	20	21	22	23	24	25	26	27	28	29	52	94	16	AB	22	23
	Staff Initials																																					

ALVA'S INSTITUTE OF ENGINEERING AND TECHNOLOGY

MIJAR, MOODBIDRI - 574 225

ATTENDANCE CUM INTERNAL

Class

Subject : Metal Cutting & Forming.

No. of Classes held

Sl. No.	USN	Name	1	2	3	4	5	6	7	8	9	10	11	12	13	14	15	16	17	18	19	20	21	22	23	24	25	26	27	28	29	30	No. of Class Attended	% of Attendance	Internal Assessment (25) I	II	III	Average Marks
27	18ME029	Shetty Yashas Harish	1	2	3	4	5	6	7	8	9	10	11	12	13	14	15	16	17	18	19	20	21	22	23	24	25	26	27	28	29	30	56	100	16	26	26	35
28	18ME030	Shivaprasad Sangame	1	2	3	4	5	6	7	8	9	10	11	12	13	14	15	16	17	18	19	20	21	22	23	24	25	26	27	28	29	30	52	94	13	20	24	28
29	18ME031	Vidyashankar	Detained																														—	—	—	—	—	22
29	18ME032	Vishnav. S.B	1	2	3	4	A	5	6	7	8	9	10	A	12	13	14	15	16	17	18	19	20	21	A	A	22	23	24	25	26	27	—	—	19	AB	—	—
	18ME033	Yashwanth. K	Detained																														—	—	—	—	—	—
30		P. Pooja			1	2	3	A	A	5	A	A	6	7	8	9	10	11	12	A	A	A	A	A	A	A	13	14	A	A	A		40/52	77	05	17	—	—
31	18ME037	Harshitha. S			1	2	3	A	A	A	A	A	5	6	7	8	9	10	11	12	13	14	15	16	A	17	A	A	A	A	A		46/52	88	20	21	23	29
32	18ME036	Sagar Loni				1	2	3	A	4	5	6	7	8	9	10	11	12	13	14	15	16	A	17	18	19	20	21	22	23	24		46/51	90	15	19	27	31
33	18ME034	Somashekar. G				1	2	3	A	4	5	A	6	7	8	9	10	11	12	13	14	15	A	16	17	18	19	20	21	22	23		45/51	88	15	22	28	32
34	18ME035	Mohammed Suhaib									1	A	2	3	4	5	6	7	A	8	9	10	11	12	13	14	A	15	A	A			37/46	81	13	15	20	22
35	19ME402	Mahesh. Chikkurmath															1	2	3	4	5	6	7	8	9	10	11	12					35/37	94	22	21	25	32
36	19ME403	Manoj. H.I															1	2	3	4	5	6	7	8	9	10	11						34/36	91	25	18	21	32
37	19ME407	Nagachandra. B.M															1	2	3	4	5	6	7	8	A	A	A						32/36	88	23	19	26	32
38	19ME409	Shrishailil. Birader																		1	2	3	4	5	6	7	8						31/33	93	28	25	23	36
39	19ME404	Mohammed Sameer. G																		1	2	3	4	5	6	7	8						30/33	100	21	19	29	33
40	19ME401	Kalakesh. S.M.																		1	2	3	4	5	6	7	8						28/33	85	16	18	21	29
41	19ME406	Muralidhar. A.V																			1	2	3	4	5	6	7						30/32	93	26	20	29	35
42	19ME400	B. Amaresha																			1	2	3	4	5	6	7						29/32	90	25	24	30	37
43	19ME405	Mubeen Sharif																				1	2	3	4	5	6						31/31	100	10	10	23	24
44	19ME408	Pavan Kumar																					1	2	3	4	5						30/30	100	10	10	21	22
21																																						
22																																						
23																																						
24																																						
25																																						
26																																						
27																																						
28																																						
29																																						
30																																						
Staff Initials																																						

ALVA'S INSTITUTE OF ENGINEERING AND TECHNOLOGY

MOODBIDRI - 574 225

ATTENDANCE & ASSESSMENT STATEMENT

Class :

Subject : Metal Cutting & Forming.

No. of Classes held :

Sl. No.	U.S.N.	Name	1 (30/10?)	2 (7/10?)	31 (24/9)	32 (30/9)	33 (1/10)	34 (3/10)	35 (4/10)	36 (10/10)	37 (11/10)	54 (22/11)	55 (29/11)	56	57	58	59	60
27	18ME029	Shetty Yashas Harish	1	5	31	32	31	34	35	36	37	54	55					
28	18ME030	Shivaprasad Sangana Goudr	1	2	29	30	A	(A)	(A)	31	(A)	44	45	+	7			
	18ME031	Vidyashankar	←	←	←	—	—	Detai				—						
29	18ME032	Vyshnav. S.B	1	2	28	29	A	30	—	—	—	—						
	18ME033	Yashwanth. K	←	←	←	—	—	Detai				—						
30		P. Pooja	←	←	15	16	17	18	19	A	A	32	33	+	7			
31	18ME037	Harshitha. S	←	←	(A)	(A)	(A)	(A)	(A)	18	19	35	36	+	10			
32	18ME036	Sagar Loni	←	←	25	26	27	A	28	29	A	38	39	+	7			
33	18ME034	Somashekar. G.	—	—	A	A	29	25	26	27	28	44	45					
34	18ME035	Mohammed Suhaib	—	—	16	(A)	(A)	(A)	(A)	17	A	30	31	+	6			
35	19ME402	Mahesh. Chikkurmath	—	—	13	14	15	16	17	18	19	34	35					
36	19ME403	Manoj. H.J	—	—	12	A	13	14	15	16	17	32	33					
37	19ME407	Nagachandra. B.M	—	—	9	10	11	12	13	14	15	31	32					
38	19ME409	Shrishail. Biradar	—	—	9	10	11	12	13	14	15	30	31					
39	19ME404	Mohammed Sameer. G	—	—	9	10	11	12	13	14	15	32	33					
40	19ME401	Kalakesh. S.M.	—	—	9	10	11	12	13	14	15	27	28					
41	19ME406	Muralidhar. A.V	—	—	8	9	10	11	12	13	14	29	30					
42	19ME400	B. Amaresha	—	—	8	9	10	11	A	12	13	28	29					
43	19ME405	Mubeen Sharif	—	—	7	8	9	10	11	12	13	30	31					
44	19ME408	Pavan Kumar	—	—	6	7	8	9	10	11	12	29	30					
21																		
22																		
23																		
24																		
25																		
26																		
27																		
28																		
29																		
30																		
Staff Initials																		

Sl. No.	77 (A1)	78 (A2)	79 (A3)	80 (A4)	81 (A5)	82–85	Total Class Conducted 12	24	36	48	60	No. of Class Attended	% of Attendance	Internal Assessment (25) I	II	III	Average Marks
27	05	05	05	05	05	= 5×2 = 10						55	100	16	26	26	33
28	05	04	04	04	04	= 4.2×2 = 09						52	94	13	20	24	28
	—	—	—	—	—	—						—	—	—	—	—	22
29	04	—	—	—	—	—						—	—	19	AB	—	—
	—	—	—	—	—	—						—	—	—	—	—	—
30	05	05	05			—						40/52	77	05	17	—	—
31	04	05	05	05	05	= 5×2 = 10						46/52	88	20	21	23	32
32	05	05	05	05	05	= 5×2 = 10						46/51	90	15	19	27	31
33	05	05	05	05	05	= 5×2 = 10.						45/51	88	15	22	28	32
34	04	04	03	02	02	= 3×2 = 06						37/46	81	13	15	20	22
35	04	05	05	05	04	= 4.6×2 = 09						35/37	94	22	21	25	32
36	05	05	05	05	05	= 5×2 = 10						33/36	91	25	18	21	32
37	05	05	04	04	05	= 4.6×2 = 09						32/36	88	23	19	26	32
38	05	05	05	05	05	= 5×2 = 10						31/33	93	28	25	23	36
39	05	05	05	05	05	= 5×2 = 10						33/33	100	21	19	29	33
40	05	05	04	05	05	= 5×2 = 10						28/33	85	16	18	21	29
41	05	05	05	05	05	= 5×2 = 10						30/32	93	26	20	29	35
42	05	05	05	05	05	= 5×2 = 10						29/32	90	25	24	30	37
43	05	05	04	04	05	= 4.6×2 = 09						31/31	100	10	10	23	24
44	05	05	04	05	00	= 3.8×2 = 08						30/30	100	10	10	21	22

Signature of students Less than 75% attendence

ALVA'S INSTITUTE OF ENGINEERING & TECHNOLOGY

Shobhavana Campus, Mijar, Moodbidri, D.K – 574225

Phone: 08258-262725, Fax: 08258-262726

Department	Mechanical Engineering	Semester:	4	INDIVIDUAL TIME TABLE
Academic Year	2019-20 (Even Semester)	Room No.:	302	W.E.F : 10 / 02 / 2020
Faculty Name	Mr. GANESH M R			

Day \ Period	1	2	BREAK	3	4	LUNCH	5	6	BREAK	7
Time	9.00 - 9.50	9.50-10.40		11.00-11.50	11.50-12.40		1.40-2.30	2.30-3.20		3.30-5.00
Monday		MCW [4]		SEMINAR [8C] (SPS/HS/GMR)			EGDL [2D] [PVB+PKC]			Seminar/Innovative Activity (GMR/ABJ/GK)(4)
Tuesday	EGDL [2A] [GBV+GK]							MCW [4]		
Wednesday	EGDL [2D] [PVB+PKC]						MCW [4]			Innovative activity /Mini project (MCK/SCS/GMR)(4)
Thursday		MMM LAB [4-B1]					EGDL [2A] [GBV+GK]			
Friday				REVIEW PAPER [SA] [VK/GMR]						
Saturday					MCW [4]					

UNITS

THEORY:	8	ACTIVITY	4	TOTAL	29
LAB/ SEMINAR(MAIN) / INTERNSHIP(MAIN)	15	SEMINAR/REVIEW /INTERNSHIP	2		

Allocation of Subjects:

ALLOCATION OF SUBJECTS

SUBJECT CODE	SUBJECT
18ME45B	METAL CASTING AND WELDING
18EGDL25	Engineering Graphics
18MEL47B	MECHANICAL MEASUREMENTS AND METROLOGY LAB

RESPONSIBILITIES

		Files to be maintained for NBA/NAAC	
1	NBA Criterion-4		
2	NAAC Criterion - 5		
3	STUDENT MENTOR		
4	CULTURAL FINE ARTS/ FUNCTION ORGANISING CO-ORDINATOR		
5	KANNADA SANGA COORDINATOR		
6	MMM LAB IN-CHARGE		
7	CLASS COORDINATOR (4TH SEM)		

TIME TABLE COORDINATOR

(Mr. SADASHIV BELLURBI & Mr. KUMAR SWAMY M C)

[redacted]

HOD

H. O. D.

Dept. Of Mechanical Engineering

Alva's Institute of Engg. & Technology

Mijar, MOODBIDRI - 574225

...S INSTITUTE OF ENGINEERING & TECHNOLOGY

Shobhavana Campus, Mijar, Moodbidri, D.K – 574225

Phone: 08258-262725, Fax: 08258-262726

DEPARTMENT OF MECHANICAL ENGINEERING

Time Table with effect from 10/02/2020

W.E.F 12/02/2020

...cademic Year	Scheme	Semester	Section	Room No	Class Coordinator
2019-20	2018	IV	-	302	Mr.GANESH M R

Time / Day	9.00 To 9.50	9.50 To 10.40	10.40 To 11.00	11.00 To 11.50	11.50 To 12.40	12.40 To 1.40	1.40 To 2.30	2.30 To 3.20	3.30 To 5.00
MON	ATD (MCK)	MCW (GMR)	TEA	KOM (PKC)	MATHS (SM)	LUNCH	MMM (DK)	FM (GBV)	Seminar/Innovative Activity(GMR+ABJ+GK)
TUE	KOM (PKC)	Foundry and Forging LAB:B1 (SPS&KCH) MMM LAB: B2 (HS & SCS)					MATHS (SM)	MCW (GMR)	ATD (MCK)
WED	FM (GBV)	MATHS (SM)		FM (GBV)	MMM (DK)		MCW (GMR)	ATD (MCK)	InnovativeActivity/Mini project(MCK+SCS+GMR)
THU	FM (GBV)	Foundry and Forging LAB: B2 (DK&MCK) MMM LAB: B1 (SPS& GMR)					MATHS (SM)	KOM (PKC)	Innovative Activity/GATE/ Casting(GK+SMB)
FRI	ATD (MCK)	ATD (MCK)	BREAK	MATHS (SM)	Aptitude (ABJ)		KOM (PKC)	MMM (DK)	FM (GBV)
SAT	MMM (DK)	KOM (PKC)		CPC (Ajith Kumar)	MCW (GMR)		Diploma Maths		

Allocation of Subjects

Subjects			Staffs	Staff Code
MATHS	18MAT41	MATHEMATICS	Ms. SOUMYA	SM
ATD	18ME42	APPLIED THERMODYNAMICS	Mr. KUMARSWAMY M C	MCK
FM	18ME43	FLUID MECHANICS	Mr. G B Vaggar	GBV
KOM	18ME44	KINEMATICS OF MACHINES	Mr. Praveen K C	PKC
MCW	18ME45B	METAL CASTING AND WELDING	Mr. GANESH M R	GMR
MMM	18ME46B	MECHANICAL MEASUREMENTS METROLOGY	Mr. Deepak Kothari	DK
CPC	18CPC49	CONSTITUTION OF INDIA, PROFESSIONAL ETHICS AND CYBER LAW	Mr. Ajith Kumar	
	18MEL47B	MECHANICAL MEASUREMENTS AND METROLOGY LAB	B2-.Hemanth Suvarna/Srinivas C S B1 - Suresh P S /Ganesh M R	HS/SCS SPS/GMR
	18MEL48B	FOUNDRY, FORGING AND WELDING LAB	B 1 - Suresh P S/ Kiran C H B2-DeepakKothari/KumarSwamy M C	SPS/KCH DK/ MCK

H.O.D.
Dept. of Mechanical Engineering
Alva's Institute of Engg. & Technology

Dr. Praveen
BE, M.Tech, Ph.D
Dean Academics (CSE, ECE & ISE) & Professor
Dept. of Electronics & Communication Engg.
Alva's Institute of Engineering & Technology
Shobhavana Campus, Mijar, Moodbidri - 574225
DEAN

PRINCIPAL
Alva's Institute of Engg. & Technology
Mijar, MOODBIDRI - 574 225

B. E. MECHANICAL ENGINEERING
Choice Based Credit System (CBCS) and Outcome Based Education (OBE)
SEMESTER - III

METAL CUTTING AND FORMING

Course Code	**18ME35A/45A**	CIE Marks	40
Teaching Hours/Week (L:T:P)	3:0:0	SEE Marks	60
Credits	03	Exam Hours	03

Course Learning Objectives:

- To enrich the knowledge pertaining to relative motion and mechanics required for various machine tools.
- To introduce students to different machine tools to produce components having different shapes and sizes.
- To develop the knowledge on mechanics of machining process and effect of various parameters on machining.
- To acquaint with the basic knowledge on fundamentals of metal forming processes
- To study various metal forming processes.

Module-1

Introduction to Metal cutting: Orthogonal and oblique cutting. Classification of cutting tools: single, and multipoint; tool signature for single point cutting tool. Mechanics of orthogonal cutting; chip formation, shear angle and its significance, Merchant circle diagram. Numerical problems.
Cutting tool materials and applications.
Introduction to basic metal cutting machine tools: Lathe- Parts of lathe machine, accessories of lathe machine, and various operations carried out on lathe. Kinematics of lathe. Turret and Capstan lathe.

Module-2

Milling: Various Milling operations, classification of milling machines, Vertical & Horizontal milling, up milling & down milling. Indexing: need of indexing, simple, compound & differential indexing.
Drilling: Difference between drilling, boring & reaming, types of drilling machines. Boring operations & boring machines.
Shaping, Planing and Slotting machines-machining operations and operating parameters.
Grinding: Grinding operation, classification of grinding processes: cylindrical, surface &centerless grinding.

Module-3

Introduction to tool wear, tool wear mechanisms, tool life equations, effect of process parameters on tool life, machinability. Cutting fluid-types and applications, surface finish, effect of machining parameters on surface finish. Economics of machining process, choice of cutting speed and feed, tool life for minimum cost and production time. Numerical problems.

Module-4

MECHANICAL WORKING OF METALS
Introduction to metal forming processes & classification of metal forming processes. Hot working & cold working of metals. Forging: Smith forging, drop forging & press forging. Forging Equipment, Defects in forging.
Rolling: Rolling process, Angle of bite, Types of rolling mills, Variables of rolling process, Rolling defects.
Drawing & Extrusion: Drawing of wires, rods & pipes, Variables of drawing process. Difference between drawing & extrusion. Various types of extrusion processes.

Module-5

Sheet Metal Operations: Blanking, piercing, punching, drawing, draw ratio, drawing force, variables in drawing, Trimming, and Shearing.
Bending — types of bending dies, Bending force calculation,
Embossing and coining.
Types of dies: Progressive, compound and combination dies.

Course Outcomes: At the end of the course, the student will be able to:

CO1: Explain the construction & specification of various machine tools.

CO2: Discuss different cutting tool materials, tool nomenclature & surface finish.

CO3: Apply mechanics of machining process to evaluate machining time.

CO4: Analyze tool wear mechanisms and equations to enhance tool life and minimize machining cost.

CO5: Understand the concepts of different metal forming processes.

CO6: Apply the concepts of design of sheet metal dies to design different dies for simple sheet metal components.

Question paper pattern:

- The question paper will have ten full questions carrying equal marks.
- Each full question will be for 20 marks.
- There will be two full questions (with a maximum of four sub- questions) from each module.
- Each full question will have sub- question covering all the topics under a module.
- The students will have to answer five full questions, selecting one full question from each module.

Sl. No.	Title of the Book	Name of the Author/s	Name of the Publisher	Edition and Year
Textbook/s				
1	Manufacturing Technology Vol I & II	P.N.Rao	Tata McGraw Hill Pub. Co. Ltd., New Delhi	1998
2	A textbook of Production Technology Vol I and II	Sharma, P.C.,	S. Chand & Company Ltd., New Delhi	1996
3	Manufacturing Science	Amithab Gosh &A.K.Malik	East-West press	2001
Reference Books				
3	Workshop Technology Vol. I and II	Chapman W. A. J.	Arnold Publisher New Delhi	1998
4	Elements of Manufacturing Technology Vol II,	Hajra Choudhary, S. K. and Hajra Choudhary, A. K.	Media Publishers, Bombay	1988
5	Metal Forming Handbook	Schuler	Springer Verlag Publication	
6	Metal Forming: Mechanics and Metallurgy	Hosford,WF and Caddell,R.M	Prentice Hall	1993
7	Manufacturing Engineering and Technology	Kalpakjian	Addision Wesley CongmenPvt. Ltd.	2000
8	Production Technology	HMT		

Alva's Institute of Engineering & Technology
Shobhavana Campus, Mijar, Moodbidri, D.K – 574225
Phone: 08258-262725, Fax: 08258-262726

DEPARTMENT OF MECHANICAL ENGINEERING

COs, PEOs, PSOs and COs-POs/PSOs mapping matrix

SEMESTER 3		
Sub Code: 18ME35A	Sub Name: Metal cutting and Forming	
Name of the Faculty: PROF. Ganesh. M.R		IA Marks: 40
Total Numbers of Lecture Hours: 50	Number of Lecture Hours/Week: 4hrs	Exam Marks: 60
		Exam Hours: 3hrs

COURSE OUTCOMES: After studying this course, students will be able to:

1. Explain the construction & specification of various machine tools, different tool materials, tool nomenclature and surface finish.
2. Explain the concept of different machining operation like Milling, Drilling, Shaping, Planing, Slotting, Grinding and its operating parameters.
3. Apply mechanics of machining processes to evaluate machining time by having the knowledge of tool wear mechanisms and equations to enhance tool life and minimize cost of machining.
4. Explain the concept of different types of forming processes and its defects.
5. Explain the concepts of sheet metal and bending operations and apply the concepts of design of sheet metal dies to design different dies for simple sheet metal operation.

PROGRAMME EDUCATION OBJECTIVES (PEOs) :

1. Provide opportunity for the students to expand knowledge in mechanical engineering.
2. Be able to provide solutions for technical and social problems through research and innovation.
3. Educate students to develop continuous learning attitude, ethics and values.

PROGRAMME SPECIFIC OUTCOMEs (PSOs) :

1. Will be able to analyze, interpret and provide solutions to engineering and social problems.
2. Adapt to the dynamic challenges and scenario in the industries.

CO-PO, CO-PSOs Mapping Matrix:

	PO1	PO2	PO3	PO4	PO5	PO6	PO7	PO8	PO9	PO 10	PO 11	PO 12	PSO 1	PSO 2
CO1	2	1			2			1	1	1		1	2	1
CO2	2	2			1			1	1	1		1	1	1
CO3	2	2			1			1	1	1		1	1	1
CO4	2	2			1			1	1	1		1	2	2
CO5	2	2			1			1	1	1		1	2	1
SUM	10	9			6			5	5	5		5	8	6
AVG	2	1.8			1.2			1	1	1		1	1.6	1.2

AIET	Lesson Plan & Execution	Format No.	ACD 08
		Issue No.	01
		Rev. No.	00

Name of the faculty	Ganesh. M.R.
Semester and Section	3rd. A. Section.
Date of Commencement	29-07-2019
Last Working Day of the Semester	30-11-2019
Source Materials List	
1. P.N. Rao, Tata McGraw Hill pub	Manufacturing Technology. Vol I & II
2. Sharma. P.C. S.Chand & company.	Production Technology. Vol I & II.
3. Amitab Gosh.	Manufacturing Science.
4. Anup Goel.	Machine Tools & Operations.
5.	

Subject Name: Metal Cutting & Forming. [18ME35A].

Period	Plan			Execution		
	Date	Topics to be covered	Source Material needed	Topics Covered	Date	Source Material Referred
1	30/07	Module 1 Orthogonal & oblique Cutting, Classf" Cutting tool, Single point	1,2 3,4	Module 1 Orthogonal & oblique Cutting, Classf" of Cutting tool, Single point	30/07	1,2 4
2	31/07	multipoint tool Signature for Single point Cutting tool.	1,2 4	multipoint tool Signature for single point Cutting tool.	31/07	1,2 4
3	1/08	Mechanics of Orthogonal Cutting, Chip formation.	1,2 3,4	Mechanics of Orthogonal Cutting Chip formation	01/08	1,2 4
4	02/08	Shear angle and its significance Merchant Circle diagram.	1,2 3	Shear angle & its significance merchant Circle diagram.	2/08	1,2 4

Period	Plan			Execution		
	Date	Topics to be covered	Source Material needed	Topics Covered	Date	Source Material Referred
5	6/08	Numerical problems Cutting rackerals and application	1, 2 3.	Merchant Circle diagram	6/08	1, 2 3
6	7/08	Lathe, Parts of Lathe machine	1, 2 3, 4	Numericals problems Cutting tool material & application.	7/08	1, 2 3
7	8/08	Accessories of Lathe machine.	1, 2 3, 4	Lathe parts of Lathe machine	8/08	1, 2 3
8	9/08	Various Operation Carried out on Lathe	1, 3	Accessories of Lathe machine	9/08	1, 2 3
9	13/08	Kinematics of Lathe	1, 2 3	Various Cutting tool material & application	13/08	1, 2 3
10	14/08	Turret and Capstan Lathe	1, 2 3	Various Operation Carried out on Lathe	14/08	1, 2 3
11	16/08	Module 2 Various milling Operation Classif of milling m/c	1, 2 3, 4	Kinematics of Lathe	16/08	1, 2 3, 4
12	20/08	Vertical & Horizontal milling, upmilling & down milling.	1, 2 3, 4	Turret & Capstan Lathes	20/08	1, 2 3, 4
13	21/08	Indexing, Need of Indexing, Simple Indexing	1, 2 3, 4	Module 2 Various milling operation, classif of milling m/c	21/08	1, 2 3, 4
14	22/08	Compound & differential Indexing	1, 2 3	Vertical & Horizontal milling, upmilling down milling.	22/08	1, 2 3, 4
15	23/08	Difference b/w drilling, boring & Reaming	1, 2 3	Indexing, Need of indexing, Simple Indexing	22/08	1, 2 3, 4
16	27/08	Types of drilling. Boring operation & Boring machine	1, 2 3	Compound & differential Indexing	27/08	1, 2 3, 4
17	28/08	Shaping, planing & Slotting m/c, operations & Operating parameters	1, 2 3, 4	Diff b/w drilling boring & Reaming	28/08	1, 2 3

Period	Plan			Execution		
	Date	Topics to be covered	Source Material needed	Topics Covered	Date	Source Material Referred
18	29/08	Grinding operations	1,2 3	Types of drilling Boring operations Boring m/c	29/08	1,2 4
19	30/08	Classn of grinding process - Cylindrical grinding	1,2 3,4	Shaping, planing Slotting m/c, operation Operating parameters	4/09	1,2 4
20	3/09	Surface & Centerless grinding	1,2 3	planning, slotting machining operation	5/09	1,2 3,4
21	04/09	module3 Introduction to tool wear, tool wear mechanism.	1,2 3,4	Grinding operations	6/09	1,2 3,4
22	05/09	tool life Equn. Effect of process parameters on tool life	1,2 3,4	Classn of grinding process - Cylindrical grinding	6/09	1,2 3,4
23	06/09	Machinability.	1,2 3,4	Classn of grinding process, operation cylindrical grinding.	12/09	1,2 3,4
24	11/09	Cutting fluid types & Appli.	1,2 4	Surface & Centerless grinding	13/09	1,2 4
25	12/09	Surface finish	1,2 4	module3 Introduction to tool wear, tool wear mechanism.	14/09	1,2 4
26	13/09	Effect of machining Parameters on surface finish	1,2 3,4	tool life Equn Effect of process Parameters on tool life	24/09	1,2 3,4
27	17/09	Economics of machining process	1,2 3,4	machinability	25/09	1,2 3,4
28	18/09	Choice of Cutting Speed & feed	1,2 3,4	Cutting fluid types & Application	26/09	1,2 3,4
29	24/09	tool life for min Cost & production time	1,3 4	Surface finish Effect of m/c'ing parameters	26/09	1,3 4
30	25/09	Numerical Problems.	1,2 4	Economics of machining process.	26/09	1,3 4

8

Period	Plan			Execution		
	Date	Topics to be covered	Source Material needed	Topics Covered	Date	Source Material Referred
31	26/09	module 4 Introduction to metal forming process. Classif Hot & cold working	1,2 4	Choice of Cutting Speed & feed	27/09	1,3 4
32	27/09	Forging, Smith Forging, drop forging, Press Forging.	1,2 3	Tool life for min Cost & production time.	30/09	1,2 3
33	1/10	Forging Equipment Defects in Forging	1,2 3	Numerical problems	1/10	1,3 4
34	3/10	Rolling, Rolling Process. Angle of bite	1,2 3,4	Numerical problems	3/10	1,2 3,4
35	4/10	Types of Rolling mills Variable of Rolling Process.	1,2 3,4	module 4 Introduction to metal forming classif, Hot & Cold working	4/10	1,2 3,4
36	9/10	Rolling Defects Drawing & Extrusion Drawing of wires	1,2 3,4	Hot & cold working. Forging, Smith Forging.	10/10	1,2 3,4
37	10/10	Drawing of Rods Pipes.	1,2 3,4	Drop Forging, press Forging Forging Equipment	11/10	1,2 3,4
38	11/10	Variables of drawing process	1,2 4	Defects in Forging Rolling, Rolling Processes.	15/10	1,2 4
39	15/10	Diff b/w drawing & Extrusion	1,2 4	Angle of bites types of Rolling mills variable of Rolling process	16/10	1,2 4
40	16/10	Various types of Extrusion process	1,2 4	Rolling Defects Drawing & Extrusion Drawing of wires	17/10	1,2 4
41	17/10	module 5 Sheet metal operations Blanking, Piercing	1,3 4	Drawing of Rods pipes	18/10	1,3 4
42	18/10	Punching, Drawing.	1,2 4	Variables of drawing process	22/10	1,2 4
43	22/10.	Draw Ratio Drawing force	1,2 4	Diff b/w drawing & Extrusion.	23/10	1,2 4

Period	Plan			Execution		
	Date	Topics to be covered	Source Material needed	Topics Covered	Date	Source Material Referred
44	23/10	Variables in drawing, Trimming	1,2 4	Various types of extrusion processes	31/10	1,2 4
45	30/10	Shearing	1,2 4	models Sheet metal operations, Blanking piercing	31/10	1,2 4
46	31/10	Bending types of bending dies.	1,2 3,4	Punching & Drawing	12/11	1,2 3,4
47	5/11	Bending Force Calculation.	1,2 4	Drawing ratio drawing force	13/11	1,2 4
48	6/11	Embossing & Coining.	1,2 4	Variables in drawing Trimming	14/11	1,2 4
49	7/11	Types of dies progressive dies.	1,2 4	Shearing Processes	18/11	1,2 4
50	8/11	Compound dies & Combination dies.	1,2 3,4	Bending, Types of bending dies	19/11	1,2 4
51	12/11	Revision of merchant circle, Numerical Problems.	1,2 3,4	Bending Force, Calculations	19/11	1,2 3,4
52	13/11	merchant circle diagram Numerical problems	1,2 3	Embossing & Coining	20/11	1,2 3
53	14/11	Revision on tool signature for single point cutting tool, rake angle, & its significance	1,2 3	Types of dies, Progressive dies	21/11	1,2 3
54	15/11	Revision on upmilling & downmilling. Indexing Need of Indexing	1,2 3,4	Compound dies & Combination dies	22/11	1,2 3,4
55	19/11	Revision on tool life eqn effect of process parameters on tool life	1,2 3,4	Revision of merchant circle, Numerical problems	29/11	1,2 3,4
56	20/11	Revision on Hot & Cold working of metal, Advantages				

Period	Plan			Execution		
	Date	Topics to be covered	Source Material needed	Topics Covered	Date	Source Material Referred
57	21/11	Revision on Rolling. Rolling process, Rolling defects.				
58	22/11	Revision on Variables & drawing, Bending types & bending dies.				
59	29/11	Revision on Bending Force Calculation, Embossing Coining.				

Others	Planned	Actual	Remarks
Special Classes	-	-	
Tutorials	-	-	
Assignments	05	05	
Seminars	-	-	
IA Tests	03	03	
Portions Covered in the entire Semester	100 % portions covered.		

Course Effectiveness			
Students Feedback			
Students Responce			
Result	No. of Students AP	No. of Students Passed	% of Result

Faculty in Charge

HOD's Signature

Signature of Principal (& Remarks if any)

Department of Mechanical Engineering		
3rd ME		
Sl No	Branch	Name
1	4AL17ME015	Bharath B D
2	4AL17ME029	Mahantesh
3	4AL17ME065	Shreyas Tiwari
4	4AL18ME001	Amith Kumar B
5	4AL18ME002	Annapurna V Patil
6	4AL18ME003	Arun Kumar P G
7	4AL18ME004	Basavaraj R Gaji
8	4AL18ME005	Bharath B T
9	4AL18ME020	Bhushan R Kundar
10	4AL18ME006	Bipin Waikhom
11	4AL18ME007	Charan D B
12	4AL18ME008	Charan Raj R
13	4AL18ME010	Dheeraj H Tandel
14	4AL18ME011	Elish Ganesh
15	4AL18ME012	Gaurav Chandrashekar Sanil
16	4AL18ME013	Gautham S N
17	4AL18ME014	Harshith T K
18	4AL18ME015	Janardhan J
19	4AL18ME016	Jayanth L U
20	4AL18ME017	Karanam Lalith Yashwanth
21	4AL18ME018	Karthik
22	4AL18ME019	Keerthan Subhashchandra Kuckian
23	4AL18ME020	Bhushan R Kundar
24	4AL18ME021	M Pratheek Shet
25	4AL18ME022	Megharaj A Kencharaddi
26	4AL18ME023	Muzammil Chitragar
27	4AL18ME024	Nabisharif
28	4AL18ME026	Preetham S
29	4AL18ME027	Puneeth Kumar D N
30	4AL18ME028	Ranson Ashray Carvallo
31	4AL18ME029	Shetty Yashas Harish
32	4AL18ME030	Shivaprasad Sangana Goudajirli
33	4AL18ME031	Vidyashankar
34	4AL18ME032	Vyshnav S B
35	4AL18ME033	Yashwanth K
36	4AL18ME700	Abdul kareem
37	4AL18ME702	Krishna
38	4AL18ME703	Kushal
39	4AL18ME704	Sandeep S
40	4AL18IS016	P Pooja
41	4AL18EC021	Harshitha S
42	4AL18CS073	Sagar Loni
43	4AL18CS086	Somashekar G

USN :

ALVA'S INSTITUTE OF ENGINEERING & TECHNOLOGY, Moodbidri
DEPARTMENT OF MECHANICAL ENGINEERING
I - INTERNAL ASSESSMENT

Semester: 3-CBCS 2018
Subject: METAL CUTTING AND FORMING (18ME35A)
Faculty: Mr Ganesh M R

Date: 19 Sep 2019
Time: 03:00 PM - 04:30 PM
Max Marks: 30

Answer any 2 question(s)

Q.No			Marks	CO	BT/CL
1	a	Explain with neat sketch Orthogonal and Oblique cutting.	7.5	CO1	L2
	b	Explain with neat sketch Horizontal Milling Machine.	7.5	CO2	L2
		OR			
	a	Explain with neat sketch Parts of lathe machine.	7.5	CO1	L2
	b	With a neat sketch explain Up milling and Down milling operations.	7.5	CO2	L2
3	a	Derive the Earnest and Merchant solution by neat Merchant circle diagram.	9	CO1	L4
	b	With a neat sketch explai following operations 1.Boring 2. Reaming 3. Counter sinking	6	CO2	L2
		OR			
4	a	Explain with neat sketch Tool geometry and significance of Single point cutting tool.	9	CO1	L2
	b	What is indexing ? Explain with neat sketch plain or Simple indexing.	6	CO2	L2

CO1 : **Explain the construction & specification of various machine tools,different tool materials,tool nomenclature and surface finish.**

CO2 : **Understand the concept of different machining operations like Milling, Drilling,Shaping ,Planing,Slotting,Grinding and its operating parameters.**

Faculty incharge

HOD 16/1/19

IQAC Members

ALVAS INSTITUTE OF ENGINEERING AND TECHNOLOGY

Shobhavana Campus, Mijar

DEPARTMENT OF MECHANICAL ENGINEERING

Sl No	Scheme of evaluation 2019-2020 Metal Cutting and Forming (18ME35A) 3rd A section	Marks	CO	BL
	PART A			
1.a	Explain with neat sketch Orthogonal and Oblique Cutting. 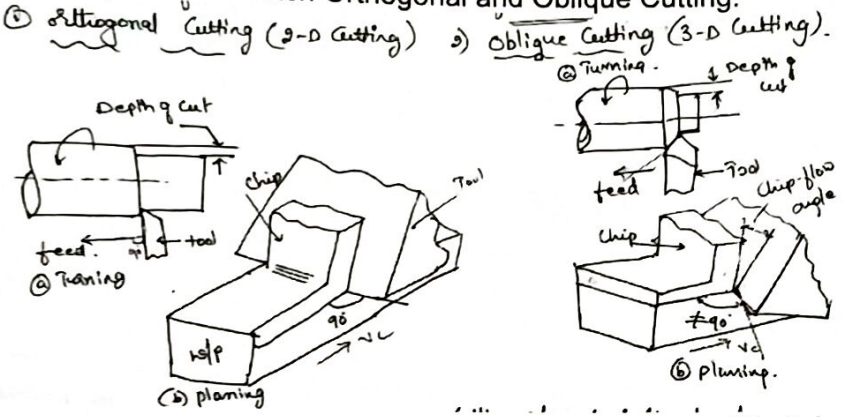 **Sketch 4 Marks** **Explanation 3. 5Marks**	7.5	1	2
1.b	Explain with neat sketch Horizontal Milling Machine. 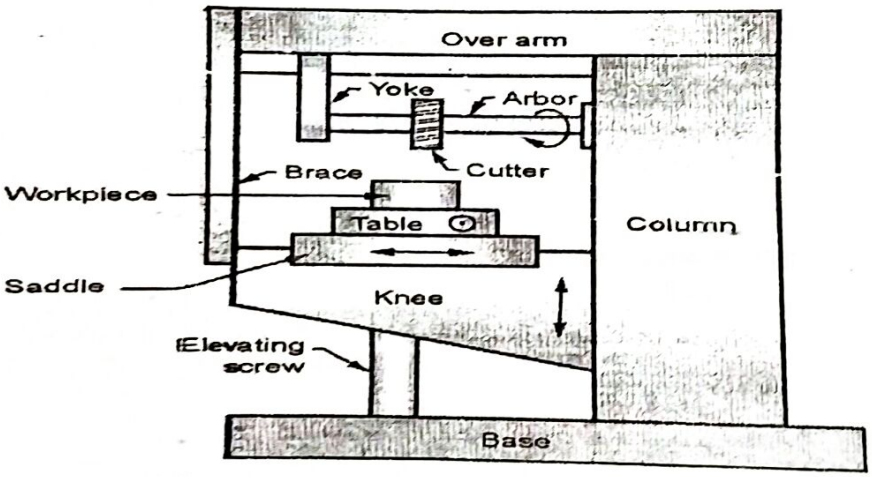 **Fig. 1.18 : Plain milling machine** **Sketch 4 Marks.** **Derivation 3.5 Marks.**	7.5	2	2
	OR			
2.a	Explain with neat sketch Parts of lathe machine. **Sketch 4 Marks.** **Explanation 3 .5Maks.**	7.5	1	2
2.b	With a neat sketch explain Up milling and Down milling operation. **Sketch 4 Marks.** **Explanation 3.5 Maks**	7.5	2	2

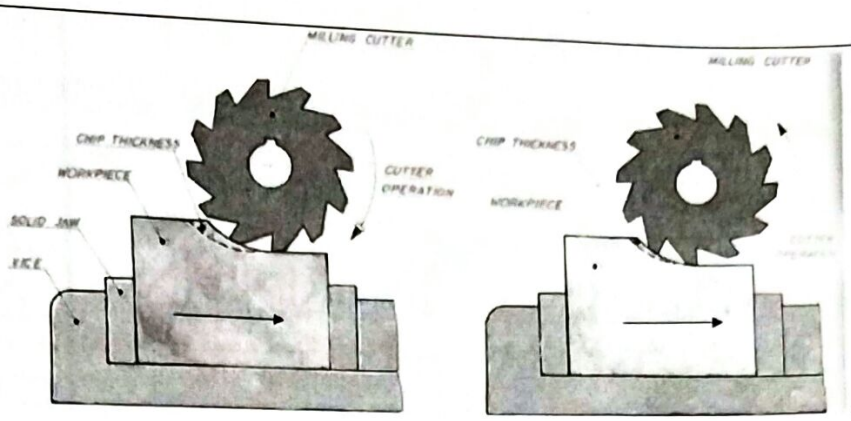

PART B

3.a	Derive the Earnest and Merchant solution by neat Merchant circle diagram. 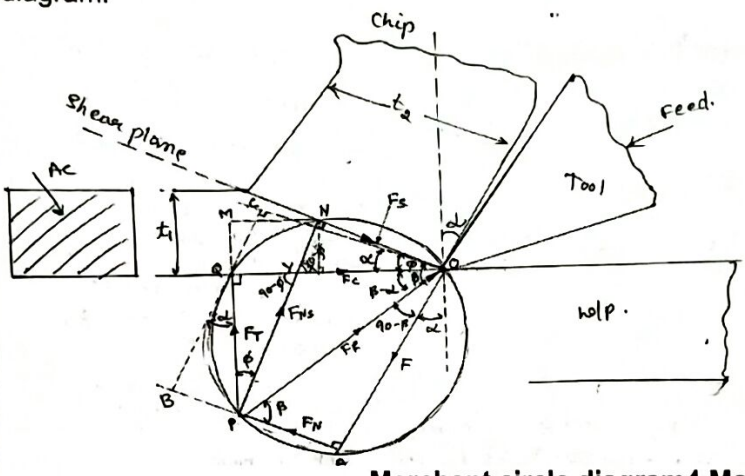 **Merchant circle diagram4 Marks** **Derivation7 Marks.**	9	1	4
3.b	With a neat sketch explain following operation. 1. Boring 2. Reaming 3. Counter sinking **Figure 3 Marks.** **Explanation 3 Marks**	6	2	2

OR

4.a	Explain with neat sketch Tool geometry and significance of single point cutting tool. 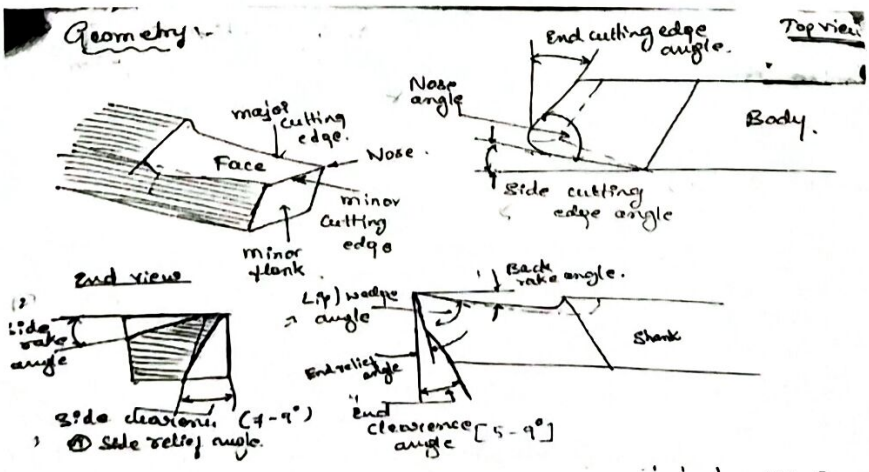 **Sketch 5 Marks.** **Explanation 4 Marks.**	9	1	2

4.b	What is indexing? Explain with neat sketch plain or Simple indexing.	6	2	2

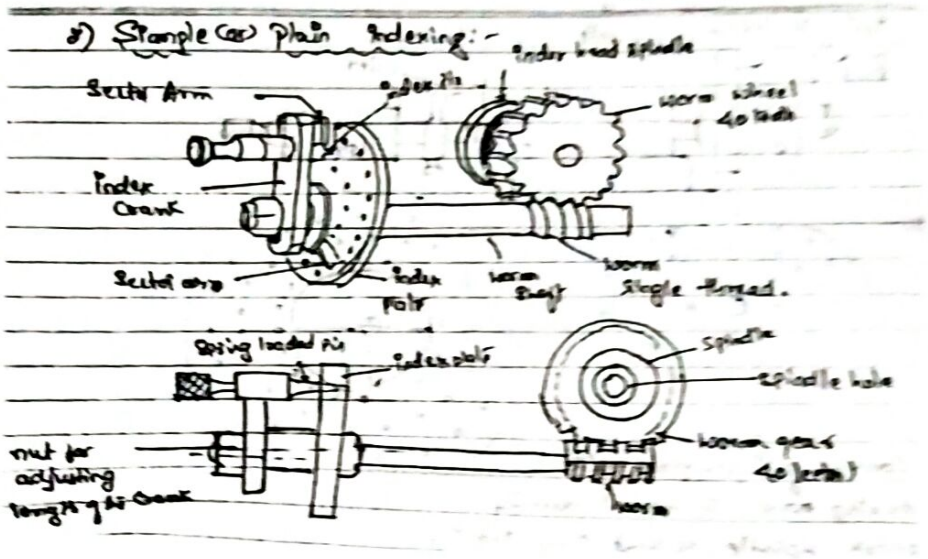

Definition 2 Marks.
Figure 2 Marks.
Explanation 2 Marks.

Faculty incharge

Ganesh M.R

HOD

IQAC Members

USN :

ALVA'S INSTITUTE OF ENGINEERING & TECHNOLOGY, Moodbidri
DEPARTMENT OF MECHANICAL ENGINEERING
II - INTERNAL ASSESSMENT

Semester: 3-CBCS 2018
Subject: METAL CUTTING AND FORMING (18ME35A)
Faculty: Mr Ganesh M R

Date: 25 Oct 2019
Time: 03:00 PM - 04:30 PM
Max Marks: 30

Answer any 2 question(s)

Q.No			Marks	CO	BT/CL
1	a	Explain with neat sketch Centreless grinding machine.	8	CO2	L2
	b	Explain with neat sketch different modes of tool failure.	7	CO3	L2
		OR			
2	a	Explain with neat sketch Horizontal shaper machine.	8	CO2	L2
	b	Define Tool life. Explain factor effecting the tool life.	7	CO3	L2
3	a	Explain with neat sketch Radial drilling machine.	8	CO2	L2
	b	The following equation for tool life is given for a turning operation $VT^{0.13} f^{0.77} d^{0.37} = C$. A 60 min tool life was obtained while cutting at V= 30 m/min, f=0.30 mm/ rev and depth of cut d = 2.5 mm. Calculate the change in tool life if the cuttingspeed, feed, depth of cut arevincreased by 20 % individually and also taken together. What will be their effect on the tool life?	7	CO3	L4
		OR			
4	a	Explain with neat sketch Jig boring machine.	8	CO2	L2
	b	In a turnung operation, it was observed that the tool life was 150min.When the cutting speed was 20 m/min.As the speed was increased to 25 m/min, the tool life dropped to 25.2 minutes.If the time required to change the tool was 2 minutes and if the cost of regrinding the tool was ten times the cost of turning per minute. Calculate (i) Tthe most economical cutting speed (ii) Tool life for maximum production.	7	CO3	L4

CO2 : Explain the concept of different machining operations like Milling, Drilling,Shaping ,Planing,Slotting,Grinding and its operating parameters.

CO3 : Apply mechanics of machining process to evaluate machining time by having the knowledge of tool wear mechanisms and equations to enhance tool life and minimize machining cost.

Faculty incharge.

HOD 25/10/19

IQAC Members.

ALVAS INSTITUTE OF ENGINEERING AND TECHNOLOGY

Shobhavana Campus, MIjar

DEPARTMENT OF MECHANICAL ENGINEERING

Sl No	II IA Scheme of evaluation 2019-2020 Metal Cutting and Forming (18ME35A) 3rd A section	Marks	CO	BL
	PART A			
1.a	Explain with neat sketch Centreless grinding machine 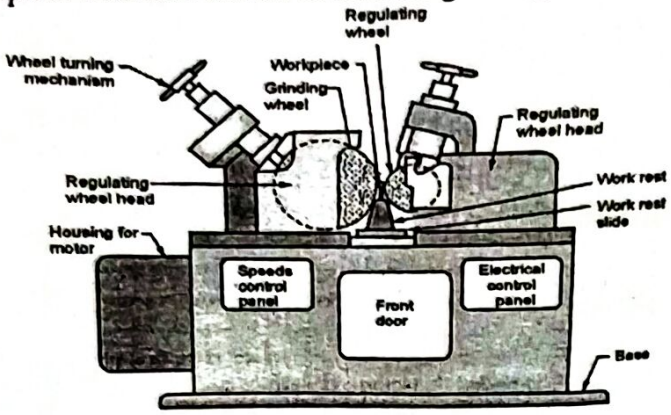 Fig. 1.53 Centreless grinder **Sketch 4 Marks** **Explanation 4Marks**	8	2	2
1. b	Explain with neat sketch different modes of tool failure **Modes of Tool failure** • **Thermal cracking and softening** • **Mechanical chipping** • **Gradual wear** • **i) Flank wear ii) Crater wear** • **Chemical wear** **Sketch 4 Marks.** **Explanation 3 Marks**	7	3	2
	OR			
2.a	Explain with neat sketch Horizontal shaper machine . 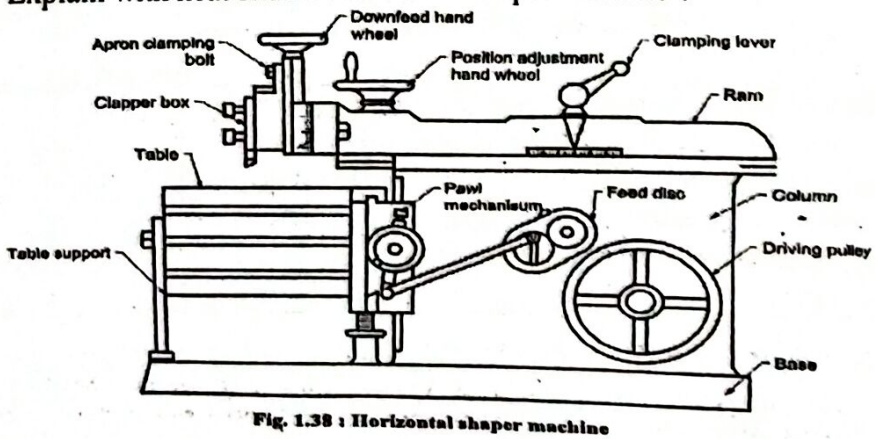 Fig. 1.38 : Horizontal shaper machine **Sketch 4 Marks.** **Explanation 4Maks.**	8	2	2

2. b	Define Tool life. Explain factor effecting the tool life. **Tool life** is defined as the time interval for which tool works satisfactorily between two successive grinding or re-sharpening of the tool. or It is the period of time upto which the cutting tool performs efficiently. It is expressed as: volume of material removed between two successive grinding. **Factors.** **1.Cutting speed** **2.feed and depth of cut** **3. Tool geometry: Rake angle** **4. Tool material** **5. Work material** **6.Nature of cutting: continuous or intermittent** **7.Rigidity of machine tool and work** **8. Cutting fluids** **Definition 2 Marks** **Explanation 5 Marks**	7	3	2
	PART B			
3.a	Explain with neat sketch Radial drilling machine. 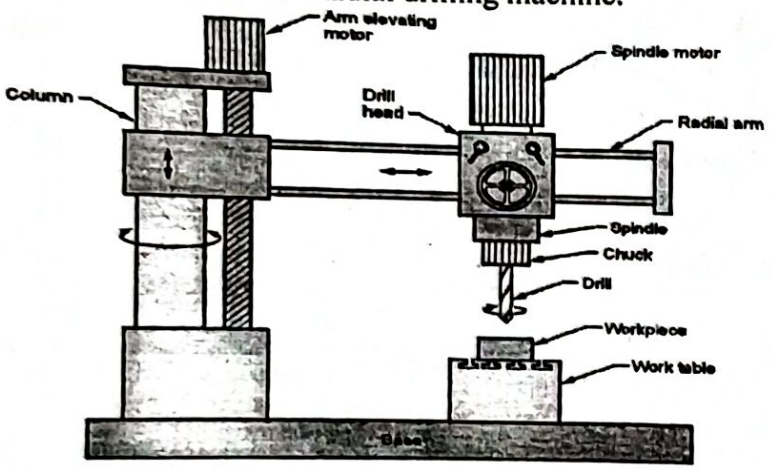 Fig. 1.15 : Radial drilling machine **Figure 4 Marks.** **Explanation 4 Marks**	8	2	2
3. b	The following equation for tool life is given for a turning operation VT 0.13 f 0.77 d 0.37 =C .A 60 min tool life was obtained while cutting at V= 30 m/min, f=0.30 mm/ rev and depth of cut d = 2.5 mm. Calculate the change in tool life if the cutting speed, feed, depth of cut are increased by 20 % individually and also taken together. What will be their effect on the tool life?	7	3	4

Solution :

Given data :

$$VT^{0.13} f^{0.77} d^{0.37} = C$$

$T_1 = 60$ min, $V_1 = 30$ m/min, $f_1 = 0.3$ mm/rev, $d_1 = 2.5$ mm.

Cutting speed, feed, depth of cut are increased by 20 %.

Hence, $f_2 = 1.20\ f_1$, $d_2 = 1.20\ d_1$, $V_2 = 1.20\ V_1$

To find : Change in tool life.

As,

$$VT^{0.13} f^{0.77} d^{0.37} = C$$

Hence, from initial conditions,

$$30 \times 60^{0.13} \times 0.3^{0.77} \times 2.5^{0.37} = C$$

$$C = 28.37$$

As V_2, f_2, d_2 are increased by 20 %, so their newer values are :

(1)

$$V_2 = 1.20\ V_1$$

$$V_2 = 1.20 \times 30 = 36 \text{ m/min}$$

By substituting this new value of V in the tool life equation,

$$36 \times T^{0.13} \times 0.3^{0.77} \times 2.5^{0.37} = 28.37$$

$$\therefore \quad T^{0.13} = 1.418$$

$$\therefore \quad \mathbf{T = 14.748 \text{ min}}$$

(2)

$$f_2 = 1.20\ f1$$

$$f_2 = 1.20 \times 0.3 = 0.36 \text{ mm/rev}$$

Substitute this new value of f in the tool life equation

$$30 \times T^{0.13} \times 0.36^{0.77} \times 2.5^{0.37} = 28.37$$

$$T^{0.13} = 1.479$$

$$\mathbf{T = 20.362 \text{ min}}$$

(3)

$$d_2 = 1.20\ d_1$$

$$d_2 = 1.20 \times 2.5 = 3 \text{ mm}$$

Substitute this new value of d in the tool life equation

$$30 \times T^{0.13} \times 0.3^{0.77} \times 3^{0.37} = 28.37$$

$$\therefore \quad T^{0.13} = 1.591$$

$$\therefore \quad \mathbf{T = 35.682 \text{ min}}$$

(4) Consider all the effects together,

$$36 \times T^{0.13} \times 0.36^{0.77} \times 3^{0.37} = 28.37$$

$$\therefore \quad T^{0.13} = 1.152$$

$$\therefore \quad \mathbf{T = 2.981 \text{ min}}$$

Formulas 2 Marks.
Answers 5Marks

OR

4.a	Explain with neat sketch Jig boring machine.	8	2	2

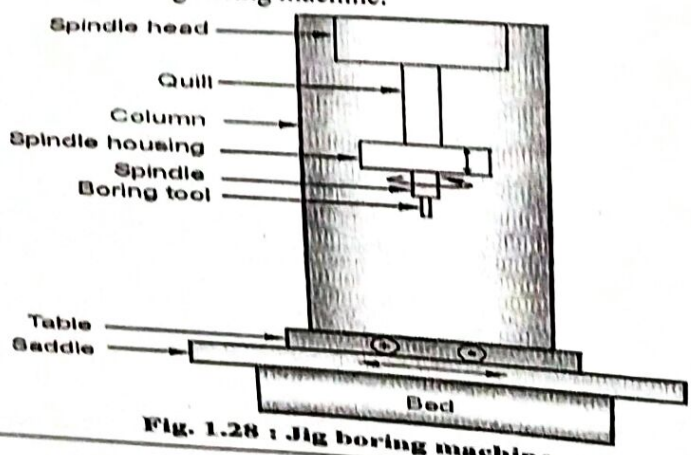

Fig. 1.28 : Jig boring machine

	Sketch 4 Marks. **Explanation 4 Marks.**			
4. b	In a turnung operation, it was observed that the tool life was 150min. When the cutting speed was 20 m/min. As the speed was increased to 25 m/min, the tool life dropped to 25.2 minutes. If the time required to change the tool was 2 minutes and if the cost of regrinding the tool was ten times the cost of turning per minute. Calculate (i) Tthe most economical cutting speed (ii) Tool life for maximum production.	7	3	4

Solution :

Given data : $T_1 = 150$ min, $V_1 = 20$ m/min,

$T_2 = 25.2$ min, $V_2 = 25$ m/min, $K_2 = 10K_1$,

$T_C = 2$ min.

Calculate : (1) V_{mp} (2) T_{mp}

We know that, $V \cdot T^n = C = \text{Constant}$

$$\therefore \quad V_1 T_1^n = V_2 T_2^n$$

$$\left(\frac{T_1}{T_2}\right)^n = \left(\frac{V_2}{V_1}\right) \quad \text{...(Taking log on both sides)}$$

$$n = \frac{\log (V_2/V_1)}{\log (T_1/T_2)} = \frac{\log (25/20)}{\log (150/25.2)} = \frac{0.223}{1.783}$$

$$\therefore \quad n = 0.125$$

$$\therefore \quad V_1 T_1^n = C \text{ or}$$

$$\therefore \quad V_2 T_2^n = C$$

$$\therefore \quad 20 \times 150^{0.125} = C$$

$$\therefore \quad C = 37.417$$

(1) V_{mp} :

Economical speed for max production is,

$$V_{mp} = \frac{C}{\left[\left(\frac{1}{n} - 1\right) T_C\right]^n} = \frac{37.417}{\left[\left(\frac{1}{0.125} - 1\right) 2\right]^{0.125}}$$

$$\therefore \quad V_{mp} = 26.903 \text{ m/min.}$$

...Ans.

(2) T_{mp} :

For maximum production, tool life is,

$$T_{mp} = \left(\frac{1}{n} - 1\right) T_c$$

$$T_{mp} = \left(\frac{1}{0.125} - 1\right) \times 2$$

$$\therefore \quad T_{mp} = 14 \text{ min.}$$

...Ans.

Formulas 2 Marks.
Answers 5Marks

Faculty incharge

Ganesh M.R

HOD 25/10/14

IQAC Members

dhl

USN :

ALVA'S INSTITUTE OF ENGINEERING & TECHNOLOGY, Moodbidri
DEPARTMENT OF MECHANICAL ENGINEERING
III - INTERNAL ASSESSMENT

Semester: 3-CBCS 2018
Subject: METAL CUTTING AND FORMING (18ME35A)
Faculty: Mr Ganesh M R

Date: 27 Nov 2019
Time: 03:00 PM - 04:30 PM
Max Marks: 30

Answer any 2 question(s)

Q.No			Marks	CO	BT/CL
1	a	Differentiate between Hot working and Cold working in metal forming process.	7	CO4	L2
	b	Explain with neat sketch Blanking and Piercing operation in sheet metal working .	8	CO5	L2
		OR			
	a	Explain with neat sketch Rod drawing process and its advantages.	7	CO4	L2
	b	Explain with neat sketch Combination die and Progressive die in sheet metal operation.	8	CO5	L2
3	a	Explain with neat sketch Planetary rolling mill and Tandem rolling mill.	8	CO4	L2
	b	Explain with neat sketch Embossing and Coining in sheet metal operation.	7	CO5	L2
		OR			
4	a	Explain with neat sketch Hooker extrusion and Hydrostatic extrusion process.	8	CO4	L2
	b	Classify the types of bending dies,Explain any two with neat sketch.	7	CO5	L2

CO4 : Explain the concept of different types of metal forming processes and its defects.
CO5 : Explain the concepts of Sheet metal and Bending operations and Apply the concepts of design of sheet metal dies to design different dies for simple sheet metal components .

Faculty incharge.

HOD

IQAC members

ALVAS INSTITUTE OF ENGINEERING AND TECHNOLOGY

Shobhavana Campus, MIjar

DEPARTMENT OF MECHANICAL ENGINEERING

Sl No	III IA Scheme of evaluation 2019-2020 Metal Cutting and Forming (18ME35A) 3rd A section	Marks	CO	BL
	PART A			
1.a	Differentiate between Hot working and Cold working in metal forming process. **Explanation 7Marks**	7	4	2
1. b	Explain with neat sketch Blanking and piercing in sheet metal working. 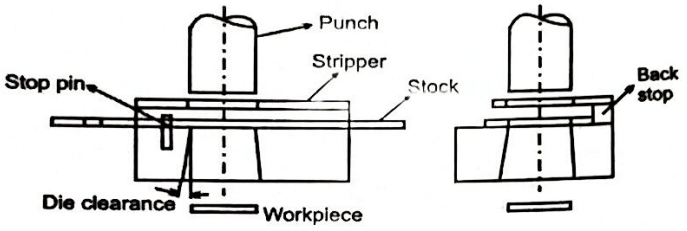 **Fig. 5.2. Blanking operation on sheet metal part** 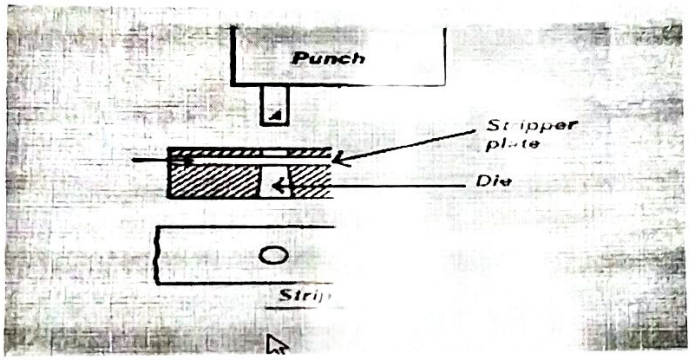 **Sketch 4 Marks.** **Explanation 4 Marks**	8	5	2
	OR			
2.a	Explain with neat sketch Rod drawing process and its advantages. 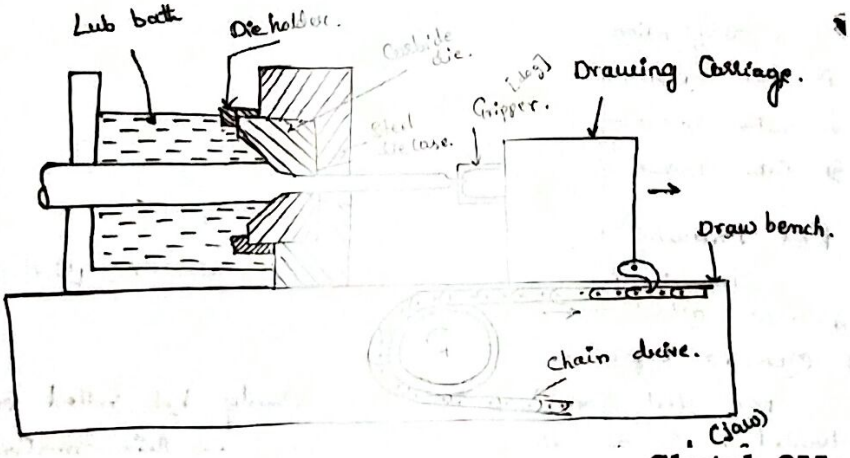 **Sketch 3Marks.** **Explanation 3Maks.** **Advantages 1 Mark**	7	4	2

2. b	Explain with neat sketch Combination die and Progressive die in sheet metal operation. 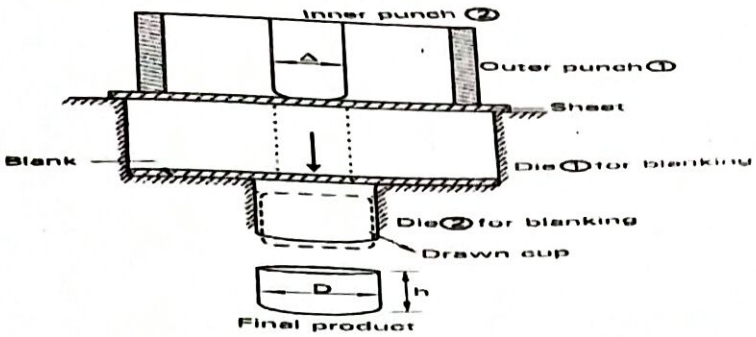 *Fig. 7.26 Combination Die* 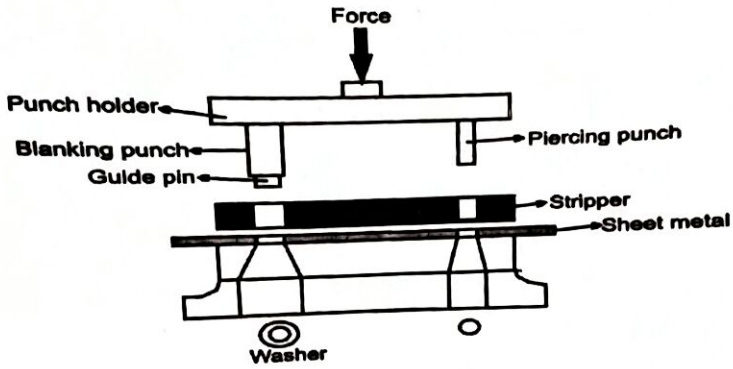 **Fig. 5.21. Progressive die** **Sketch 4 Marks** **Explanation 4Marks**	8	5	2
	PART B			
3.a	Explain with neat sketch Planetary rolling mill and Tandem rolling mill. 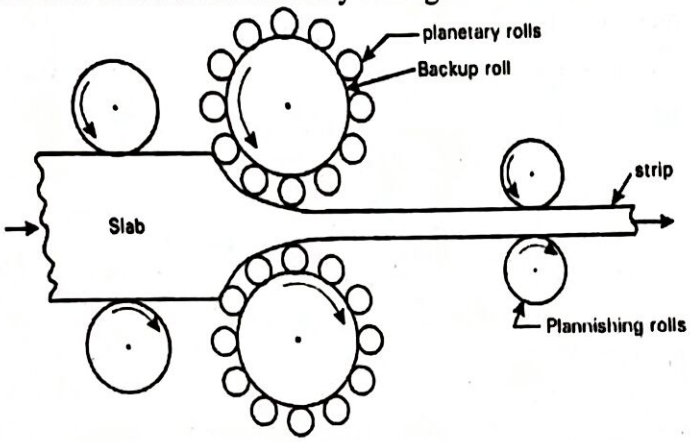 *Fig. 4.7 Planetary mill* 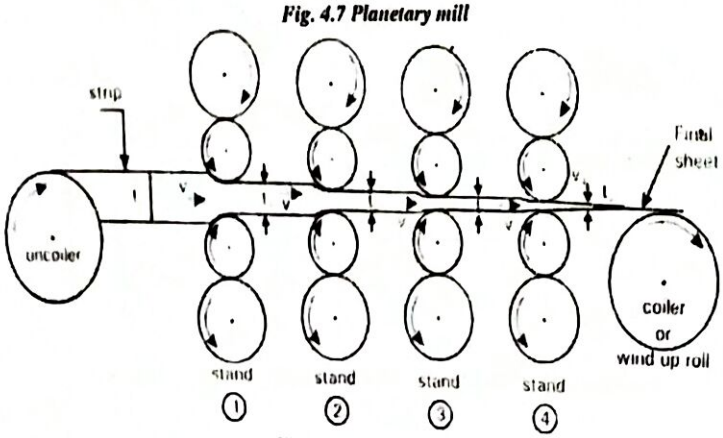 *Fig. 4.8 Tandem mill.* **Figure 4 Marks.** **Explanation 4 Marks**	8	4	2

3. b	Explain with neat sketch Embossing and Coining in sheet metal operation.	7	5	2

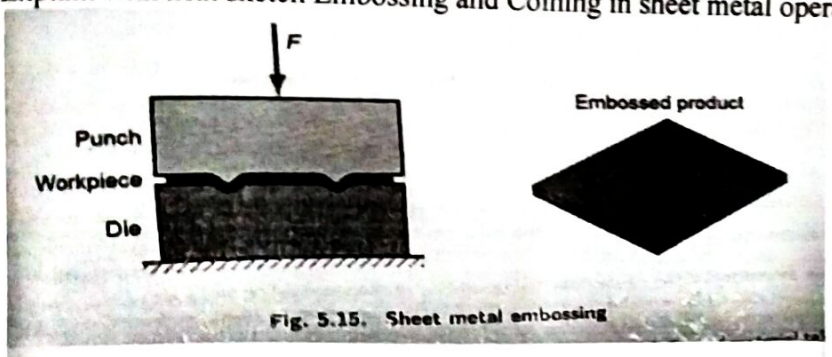

Fig. 5.15. Sheet metal embossing

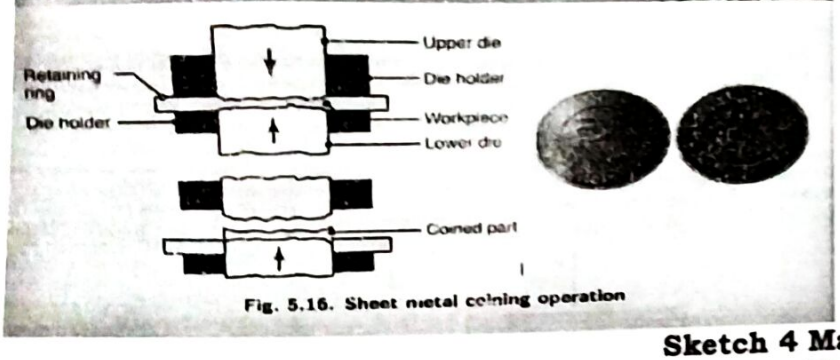

Fig. 5.16. Sheet metal coining operation

Sketch 4 Marks.
Explanation 3Marks

OR

4.a	Explain with neat sketch Hooker extrusion and Hydrostatic extrusion process.	8	4	2

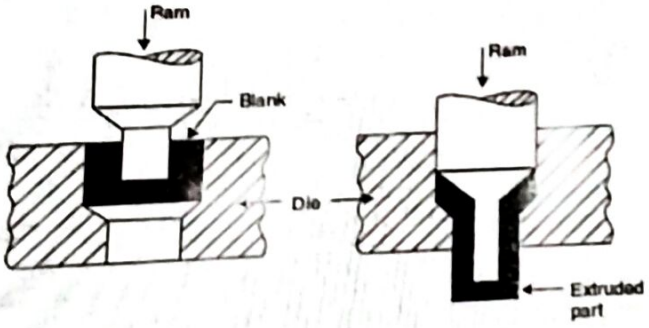

Hooker extrusion

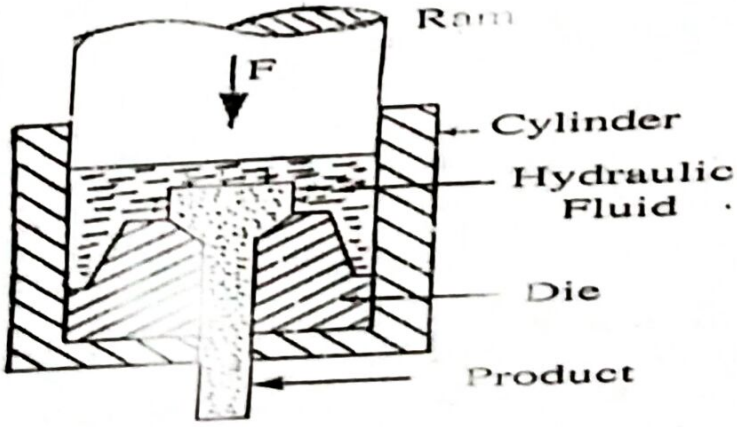

Fig. 5.8 Hydrostatic Extrusion

Sketch 4 Marks.
Explanation 4 Marks.

4. b	Classify the types of bending dies, Explain any two with neat sketch. **V Bending** **Edge bending** **Angle bending** **Curling operation** **Forming by die and punch** **Stretch forming** **Classification 2 Marks.** **Sketch 3Marks** **Explanation 2 Marks**	7	5	2

Faculty incharge

Ganesh M.R

HOD

IQAC Members

Metal Cutting and Forming(18ME35A)

Assignment 1 3rd A

Module 1: Introduction to Metal cutting

1. Explain with neat sketch Orthogonal and Oblique cutting.
2. Explain with neat sketch Parts of lathe machine.
3. Explain with neat sketch Specification of lathe machine.
4. List out the various operations carried out on lathe and explain any three with neat sketches.
5. With neat sketch differentiate Turret and Capstan lathe.
6. List out various types of cutting tool materials and explain any three.
7. Explain with neat sketch Tool geometry and significance of Single point cutting tool.
8. Derive the expression of Shear angle and shear strain in metal cutting.
9. Derive the Earnest and Merchant circle diagram.

Metal Cutting and Forming(18ME35A)

Assignment 2 3rd A

Module 1: Milling, Drilling, Shaping, Grinding

1. Explain with neat sketch horizontal milling machine.
2. Explain with neat sketch Upmilling and Down milling.
3. List out milling operation explain any 4 with neat sketch.
4. Explain with neat sketch Profile milling.
5. Define indexing? Explain with neat sketch compound and Differential indexing.
6. Explain with neat sketch Radial and Sensitive drilling machine.
7. List out Drilling operation explain any 4 with neat sketch.
8. Explain with neat sketch horizontal boring machine.
9. Explain with neat sketch horizontal shaper machine.
10. Explain with neat sketch Cylindrical and Centerless grinding machine.

Metal Cutting and Forming(18ME35A)

Assignment 3 3rd A

Module 1: Tool wear and tool wear mechanisms

1. Explain with neat sketch modes of tool failure.
2. Explain with neat sketch Flank wear and Crater wear.
3. Explain tool wear mechanism.
4. Explai factor effecting tool life.
5. What is tool life? Derive Toylor tool life equations.
6. List out types of cutting fluids , Explain its properties.
7. Explain with neat graph economics of machining process.
8. What is machinability? Expalin machinebality index.

Metal Cutting and Forming(18ME35A)

Assignment 4 3rd A

Module 4: Mechanical working of Metals

1.Classify the metal working processes.
2.Differentiate between Hot working and Cold working of metals.
3.Explain with neat sketch Hydraulic press forging and board drop forging .
4.Explain different types of forging defects.
5. Classify different types of rolling mills ,explain any three with neat sketch.
6. Explain with neat sketch Rod drawing process.
7. Classify different types of Tube drawing ,explain any two with neat sketch.
8.Classify extrusion process, explain with neat sketch direct and indirect extrusion.
9. Explain with neat sketch Hooker extrusion and Hydrostatic extrusion processes.

Metal Cutting and Forming(18ME35A)

Assignment 5 3rd A

Module 5: Sheet metal operation

1. Explain with neat sketch Blanking, Piercing, Punching operations.
2. Explain with neat sketch Trimming and Shearing of sheet metal.
3. Explain with neat sketch Progressive die, Compound die, and Combination dies.
4. Explain with neat sketch Embossing and Coining of sheet metal operation.
5. Explain with neat sketch Different types of Bending dies and its process.

CBCS SCHEME

USN | | | | | | | | | | |

15MEB405/15MA45

Fourth Semester B.E. Degree Examination, June/July 2018
Machine Tools and Operations

Time: 3 hrs. Max. Marks: 80

Note: Answer any FIVE full questions, choosing one full question from each module.

Important Note : 1. On completing your answers, compulsorily draw diagonal cross lines on the remaining blank pages.
2. Any revealing of identification, appeal to evaluator and /or equations written eg, 42+8 = 50, will be treated as malpractice.

Module-1

1 a. Define Machine tool. Give the classification of machine tools. (08 Marks)
b. Explain the constructional features of horizontal milling machine with a neat sketch. (08 Marks)

OR

2 a. Define drilling. With a neat sketch explain bench drilling machine. (08 Marks)
b. Define grinding. Compare cylindrical grinding and center less grinding. (08 Marks)

Module-2

3 a. Explain the following operations with simple sketches:
i) Turning
ii) Counter sinking
iii) Knurling
iv) Reaming. (08 Marks)
b. What are the different motions provided on:
i) Drilling machine
ii) Planer
iii) Grinding machine
iv) Shaping machine. (08 Marks)

OR

4 a. With a neat sketch, explain thread cutting operation on lathe. (08 Marks)
b. List and explain different machining parameters and related quantities on a lathe. (08 Marks)

Module-3

5 a. Briefly explain the desirable properties of cutting fluids. (08 Marks)
b. Calculate machining time for a work piece of 90mm diameter and 130mm length turned in 2 passes. If the approach length is 12mm and over travel is 5mm. Given cutting speed = 30m/min and feed 0.3 mm/rev. (08 Marks)

OR

6 a. Briefly explain desirable properties or characteristics of an ideal cutting tool material. List various cutting tool materials. (08 Marks)
b. A shaping machine is used to machine a rectangular piece of 18cm long and 35cm width, with cutting speed being 26 m/min. Feed is 0.8 mm/cycle. Time for cutting to return stroke is 3:2. Find the time required to machine the whole surface. (08 Marks)

Module-4

7 a. Explain the different types of chips produced during metal cutting with neat sketches. (08 Marks)

b. With neat sketches explain the difference between orthogonal cutting and oblique cutting. (08 Marks)

OR

8 a. What are the components of cutting force in turning a cylindrical job? (08 Marks)

b. It is required to drill a 20mm diameter hole in a mild steel plate at a feed rate of 0.25 mm/rev and at a drill speed of 300rpm. Estimate the power required. Take machining constant C = 0.36 for mild steel material. (08 Marks)

Module-5

9 a. List the factors affecting tool life and briefly explain them. (08 Marks)

b. A tool life of 80 minutes is obtained at a speed of 30mpm and 8 minutes at 60mpm. Determine the following:

i) Tool life equation

ii) Cutting speed for 4 minute tool life. (08 Marks)

OR

10 a. Define tool wear. Explain crater wear and flank wear. (08 Marks)

b. What is machinability? List out the machinability criteria and explain them briefly. (08 Marks)

* * * * *

CBCS Scheme

USN 4 A L 1 6 M E 7 1 7

15ME35B

Third Semester B.E. Degree Examination, Dec.2017/Jan.2018
Machine Tools and Operations

Time: 3 hrs. Max. Marks: 80

Note: Answer any FIVE full questions, choosing one full question from each module.

Important Note : 1. On completing your answers, compulsorily draw diagonal cross lines on the remaining blank pages.
2. Any revealing of identification, appeal to evaluator and /or equations written eg, 42+8 = 50, will be treated as malpractice.

Module-1

1 a. What is Drilling, sketch and explain the common parts of a Radial Drilling Machine. **(08 Marks)**

b. Define Milling. Differentiate between up milling and down milling with neat sketch. **(08 Marks)**

OR

2 a. With a suitable sketch, explain the working principle of centerless grinding Machine. **(08 Marks)**

b. List out the differences between shaper and planer. **(08 Marks)**

Module-2

3 a. With a suitable, sketch, explain the following milling operations.
i) Gang milling ii) Saw milling. **(08 Marks)**

b. Draw and explain the following operations using drilling machine.
i) Reaming ii) Counter Boring. **(08 Marks)**

OR

4 a. Describe the properties of the cutting tool materials and types of cutting tool materials. **(08 Marks)**

b. A work piece of diameter 38mm and Length 400mm was turned on a lathe using a suitable cutting tool. Determine the machining time to reduce the work piece to 36.5mm diameter is one pass with cutting speed of 30mpm and forced 0.7mm/rev. **(08 Marks)**

Module-3

5 a. With suitable sketch, elaborate the types of operations performed on a Turret Lathe. **(08 Marks)**

b. Sketch and explain in brief the process of Gear milling and thread milling operations. **(08 Marks)**

OR

6 a. What is Grinding, with a suitable sketch, Describe vertical spindle grinding machine, with reciprocating table. **(08 Marks)**

b. State the functions of cutting fluid. Briefly, explain the properties of cutting fluids. **(08 Marks)**

Module-4

7 a. Define Indexing. With suitable sketch describe simple indexing mechanisms. **(08 Marks)**

b. Draw and explain the driving mechanism of a bench drilling machine. **(08 Marks)**

OR

8 a. Define the following terms :
   i) Cutting speed
   ii) Feed
   iii) Depth of cut
   iv) Machining time with equations for turning operations. **(08 Marks)**

b. Calculate the required rpm of work piece of 100mm diameter to provide a cutting speed to 50mpm. Also find machining time of length of work is 400mm and feed is 0.4mm/rev. **(08 Marks)**

Module-5

9 a. What do you mean by the term chip formation? Describe types of chips with a neat sketch. **(08 Marks)**

b. With a suitable sketch. Describe orthogonal and oblique cutting operations. **(08 Marks)**

OR

10 a. Define Tool wear. Explain the following terms :
   i) Crater wear
   ii) Flank wear **(08 Marks)**

b. Explain the terms Tool failure and Tool life. Describe the effects of cutting parameter on Tool life. **(08 Marks)**

* * * * *